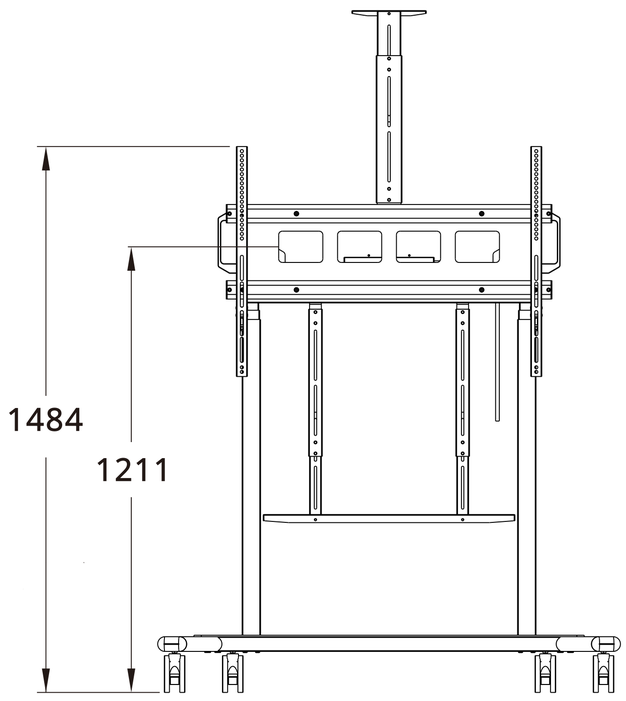
1484
1211

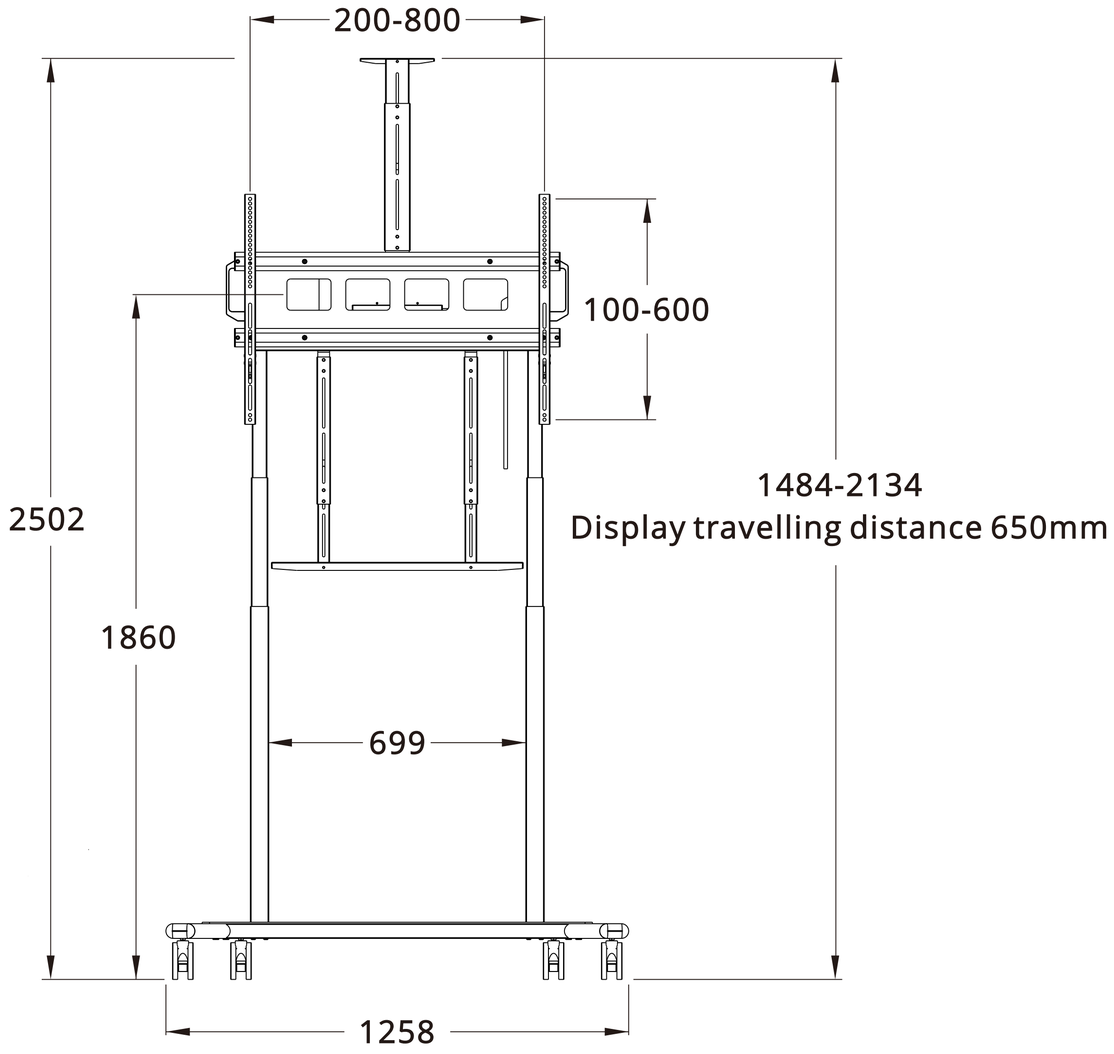
200-800
100-600
2502
1860
1484-2134
Display travelling distance 650mm
699
1258

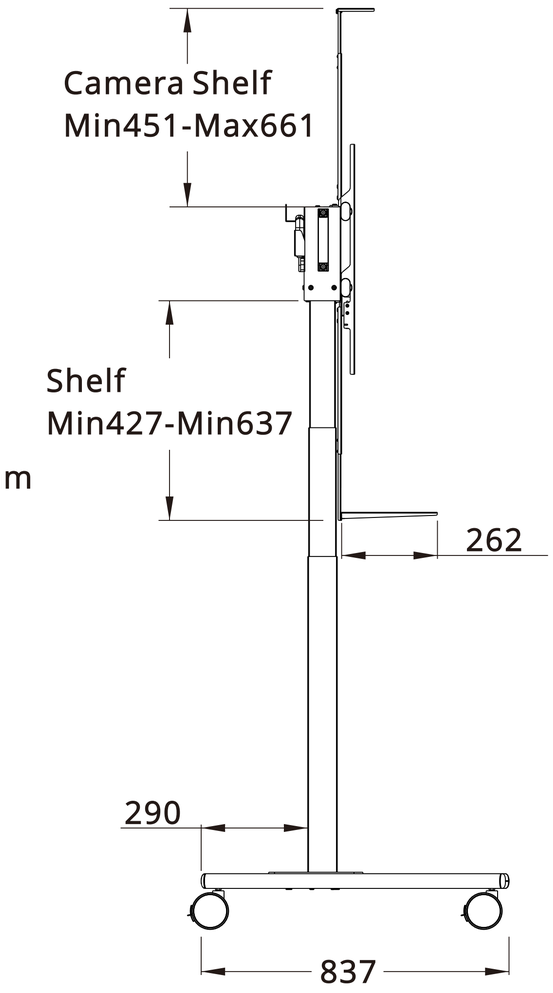
Camera Shelf
Min451-Max661
Shelf
Min427-Min637
262
290
837

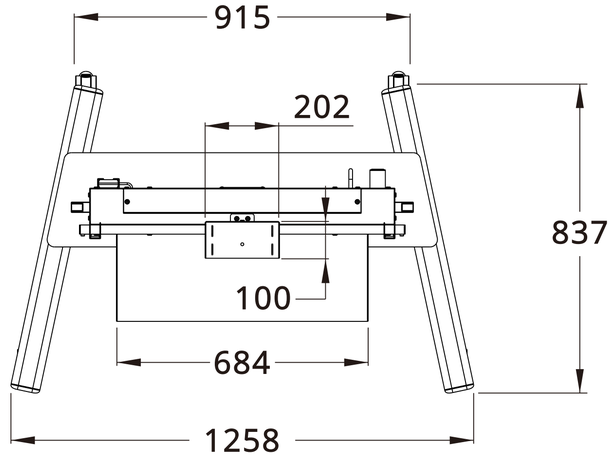
915
202
837
100
684
1258